0 601 613 603

Issue Stand 01-03-16
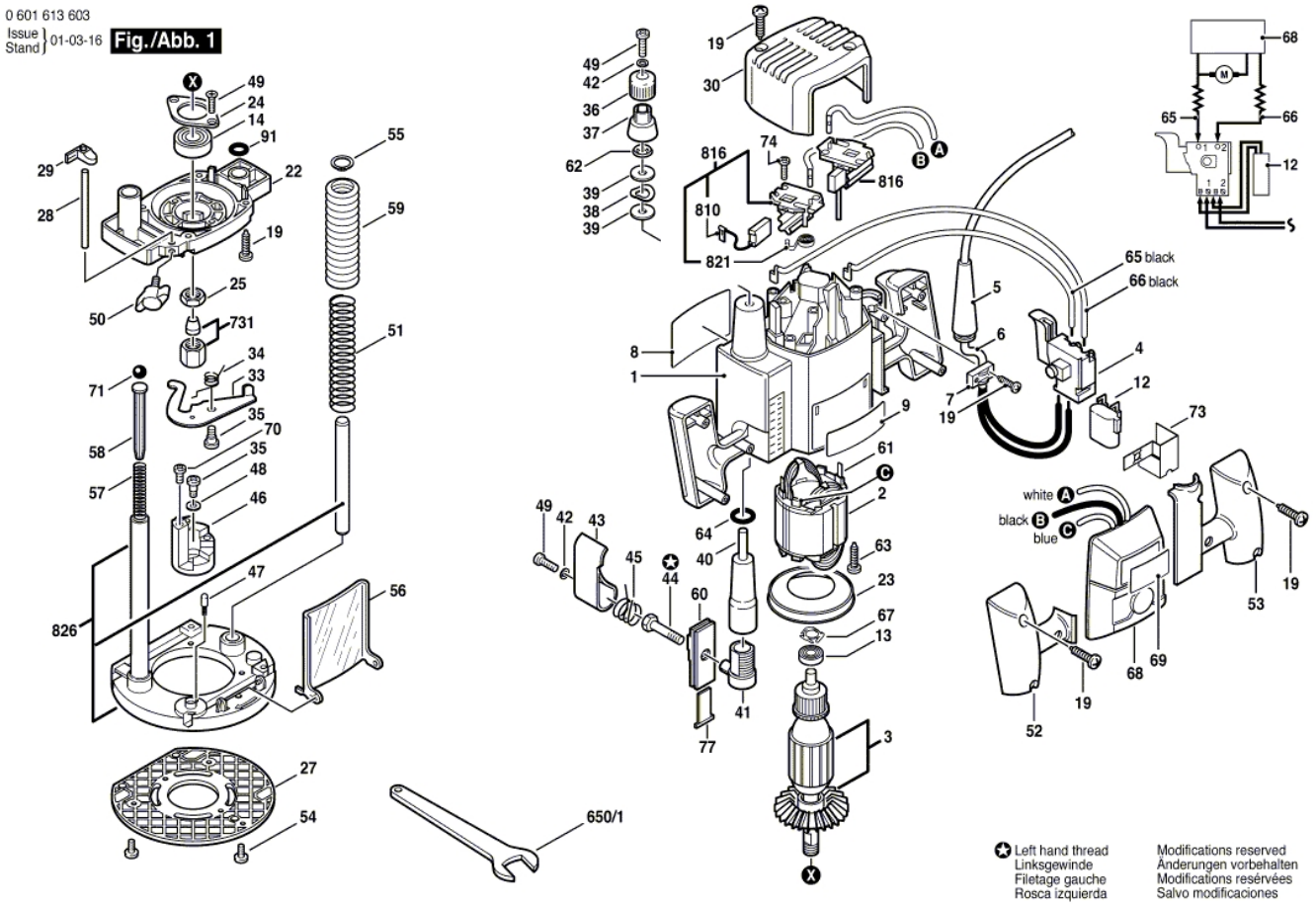
Fig./Abb. 1